BALTIMORE
AIRCOIL COMPANY

VCL Evaporative Condensers

OPERATING AND MAINTENANCE INSTRUCTIONS

Recommended Maintenance and Monitoring Programme

Baltimore Aircoil Company equipment needs to be properly installed, operated and maintained. Documentation of the equipment used, including a drawing, technical data sheet and this manual should be kept on record. To achieve long, trouble-free and safe operation, it is necessary to establish an operating plan including a programme of regular inspection, monitoring and maintenance. All inspections, maintenance and monitoring actions should be recorded in a cooling system logbook. The operating and maintenance instructions published here can be used as a guide to achieve these goals.

In addition to establishing the operating plan and the cooling system logbook it is recommended to conduct a cooling system risk analysis, preferably by an independent third party.

For the cooling system, scale, corrosion and biological control must be established and initiated when the system is first filled with water and administered on a regular basis thereafter in accordance with recognized Codes of Practice, (such as EUROVENT 9 - 5/6, ACOP HSC L8, Guide des bonnes pratiques, Legionella et tours aéroréfrigérantes, etc.). Water sampling, test results and corrective actions should be recorded in the cooling system logbook.

For more specific recommendations on keeping your cooling system efficient and safe, contact your local BAC Balticare service provider or representative. Name, e-mail and phone number can be found on the website www.BACService.eu.

Checks and Adjustments	Start-Up	Weekly	Monthly	Quarterly	Every 6 Months	Annually	Shutdown
Cold Water Basin & strainer	X			X			
Operating level and make-up	X		X				
Blow down	X		X				
Sump heater package	X				X		
Belt tension	X		X				
Drive alignment	X					X	
Locking Collar	X				X		
Rotation of fan(s) and pump(s)	X						
Motor voltage and current	X					X	
Unusual noise and/or vibration	X		X				

Inspections and Monitoring	Start-Up	Weekly	Monthly	Quarterly	Every 6 Months	Annually	Shutdown
General condition	X		X				
Heat transfer section	X				X		
Drift eliminators	X				X		
Water distribution	X				X		
Fan shaft	X			X			
Fan Motor	X			X			
Spray Water Pump	X			X			
Electric Water Level Control Package (optional)	X				X		
TAB test (dip slides)	X	X					
Circulating water quality	X		X				
System overview	X					X	
Record keeping	as per event						

Lubrication	Start-Up	Weekly	Monthly	Quarterly	Every 6 Months	Annually	Shutdown
Fan shaft bearings	X				X		X
Motor bearings*	X				X		
Adjustable motor base	X				X		X

* only for motors with grease fittings with typical frame size > 200L (>30 KW)

Cleaning procedures	Start-Up	Weekly	Monthly	Quarterly	Every 6 Months	Annually	Shutdown
Mechanical cleaning	X					X	X
Disinfection**	(X)					(X)	(X)
Drain Basin and pump							X

** depends on applied code of practice

Notes

1. Water Treatment and auxiliary equipment integrated in the cooling system may require additions to the table above. Contact suppliers for recommended actions and their required frequency.
2. Recommended service intervals are for typical installations. Different environmental conditions may dictate more frequent servicing.
3. When operating in ambient temperatures below freezing, the unit should be inspected more frequently (see Cold Weather Operations in the appropriate Operating and Maintenance Instructions).
4. For units with Belt Drive, tension on new belts must be readjusted after the first 24 hours of operation and monthly thereafter.

Table of Contents

OPERATING AND MAINTENANCE INSTRUCTIONS

1	**Construction Details**	**5**
2	**General Information**	**6**
	Operating Conditions	6
	Connecting Pipework	6
	Safety Precautions	7
	Disposal Requirements	8
	Non-walking Surfaces	8
	Modifications by others	8
	Warranty	8
3	**Water Care**	**9**
	About Water Care	9
	Biological Control	12
	Chemical Treatment	12
	Passivation	12
	Overflow Connection	13
4	**Cold Weather Operations**	**14**
	About cold weather operation	14
	Protection Against Sump Water Freezing	14
	Capacity Control	14
5	**Maintenance Procedure**	**16**
	Checks and Adjustments	16
	Inspections and Corrective Actions	22
	Lubrication	25
	Cleaning Procedures	26
6	**Comprehensive Maintenance**	**28**
	About Comprehensive Maintenance	28
	Prolonged Outdoor Stay	28
7	**Further Assistance & Information**	**29**
	Balticare	29
	More Information	29

1

VCL
CONSTRUCTION DETAILS

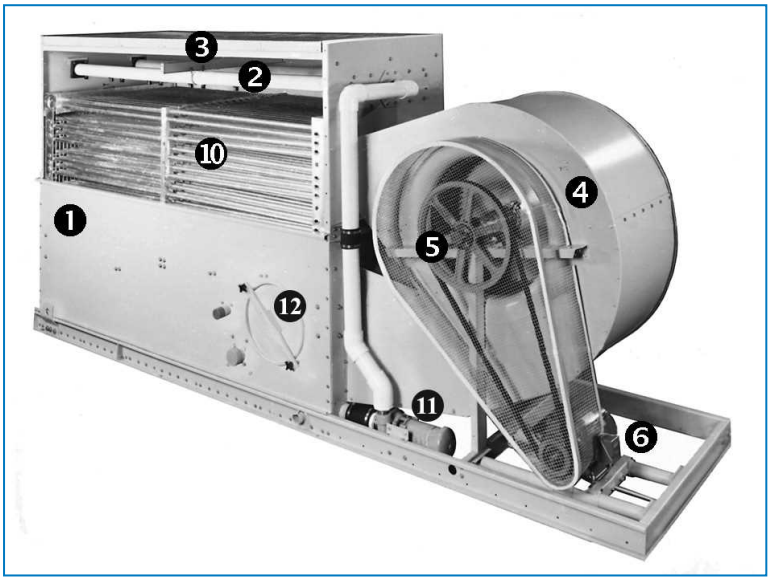

1. Casing
2. Water Distribution Section
3. High Efficiency Drift Eliminators
4. Forward curved centrifugal Fan
5. Fan shaft and bearing
6. Fan motor
10. Coil
11. Pump
12. Mansize access door

Operating Conditions

BAC cooling equipment is designed for the operating conditions specified below, which must not be exceeded during operation.

- **Wind Load**: For safe operation of unshielded equipment exposed to wind speeds above 120 km/h installed at a height above 30 m from the ground, contact your local BAC-Balticare representative.
- **Seismic Risk**: For safe operation of equipment installed in moderate and high hazard area's contact your local BAC-Balticare representative.

Standard electrical motors are suitable for an ambient temperature range from -25°C to +40°C.

- Design pressure: 23 bar (std.) or 28 bar (option) according to PED
- Refrigerant inlet temperature: max. 120°C
- Refrigerant outlet temperature: min. - 20°C
- Suitable refrigerants: Natural Refrigerants (R-717, R-1270), Halocarbon Refrigerants, HFC`s.

Standard condenser coils are manufactured from black steel and hot dip galvanised after fabrication and may contain certain contaminants, such as carbon, iron oxyde or welding particles. The interior condition of the coil, including humid air must be considered, when using halocarbon (or HFC) refrigerants and sensitive system components, such as electronic expansion devices or semi hermetic compressors. The installer must take the necessary precautions on site to safeguard the operation of these components in conjunction with the condenser coils.

Maximum spray pressure: 14 kPa (If pump(s) are installed by others, it is recommended to install a pressure gauge at the inlet of the water distribution system.)

At ambient temperatures above 40°C ensure spray water pump remains running, even if condenser is idle. This prevents unwanted discharge of refrigerant through safety valves (by others).

Stand-by pump arrangements for evaporative condensers require alternating operation of each pump at least twice per week to avoid stagnant water conditions and bacteriological growth.

PURGE REQUIREMENTS

The installer of BAC condensers must ensure proper air purging of the system prior to operation.

Entrained air can obstruct free drainage of refrigerant and reduce condensing capacity, resulting in higher operating pressures than designed.

All connections (installed by others) must be leak free and tested accordingly.

To verify absence of non condensables in the refrigeration system, follow the instructions in the BAC Application Handbook – EU Edition (https://www.baltimoreaircoil.eu/downloads/pdf-Application-Handbook-EU-Edition), Section "Condenser Engineering Guidelines".

Connecting Pipework

All piping external to BAC cooling equipment must be supported separately.

In case the equipment is installed on vibration rails or springs, the piping must contain compensators to eliminate vibrations carried through the external pipework.

Suction pipe sizing should be done according to good practice, which may for larger flows require larger pipe diameters than the outlet connection. In such cases adapter pieces need to be installed.

Safety Precautions

All electrical, mechanical and rotating machinery constitutes a potential hazard, particularly for those not familiar with its design, construction and operation. Accordingly, adequate safeguards (including use of protective enclosures where necessary) should be taken with this equipment both to safeguard the public (including minors) from injury and to prevent damage to the equipment, its associated system and the premises.
If there is doubt about safe and proper rigging, installation, operation or maintenance procedures, contact the equipment manufacturer or his representative for advice.
When working on operating equipment, be aware that some parts may have an elevated temperature. Any operations on elevated level have to be executed with extra care to prevent accidents.

CAUTION

Do not cover units with PVC eliminators with a plastic tarpaulin. Temperature increase due to sun radiation could deform the eliminators.

AUTHORIZED PERSONNEL

The operation, maintenance and repair of this equipment should be undertaken only by personnel authorized and qualified to do so. All such personnel should be thoroughly familiar with the equipment, the associated systems and controls and the procedures set forth in this and other relevant manuals. Proper care, personal protective equipment, procedures and tools must be used in handling, lifting, installing, operating, maintaining and repairing this equipment to prevent personal injury and/or property damage. Personnel must use personal protective equipment where necessary (gloves, ear plugs, etc...)

MECHANICAL SAFETY

Mechanical safety of the equipment is in accordance with the requirements of the EU machinery directive.
Depending upon site conditions it also may be necessary to install items such as bottom screens, ladders, safety cages, stairways, access platforms, handrails and toe boards for the safety and convenience of the authorized service and maintenance personnel.
At no time this equipment should be operated without all fan screens, access panels and access doors in place.
When the equipment is operated with a variable fan speed control device, steps must be taken to avoid operating at or near to the fan's «critical speed».
For more information consult your local BAC Balticare representative.

ELECTRICAL SAFETY

Each fan and pump motor associated with this equipment should be installed with a lockable disconnect switch located within sight of the equipment. No service work should be performed on or near the fans, motor, drives or inside the equipment unless fan and pump motors, heaters etc. are electrically isolated.

LOCATION

All cooling equipment should be located as far away as possible from occupied areas, open windows or air intakes to buildings.

LOCAL REGULATIONS

Installation and operation of cooling equipment may be subject to local regulations, such as establishment of risk analysis. Ensure regulatory requirements are consistently met.

Disposal Requirements

Dismantling of the unit and treatment of refrigerants, oil and other parts must be done with respect to the environment whilst protecting workers from potential risks related to exposure to harmful substances.
National and regional legislation for material disposal and protection of workers should be taken into account with regard to:

- Appropriate handling of construction and maintenance materials when dismantling the unit. In particular when dealing with materials that contain harmful substances, such as asbestos or carcinogenic substances.
- Appropriate disposal of the construction and maintenance materials and components such as steel, plastics, refrigerants and waste water according to local and national requirements for waste management, recycling and disposal.

Non-walking Surfaces

Access to and maintenance of any component needs to be performed in accordance with all local applicable laws and regulations. If the proper and required access means are not present, temporary structures need to be foreseen. Under no circumstance can one use parts of the unit, that are not designed as an access mean, unless measures can be taken to mitigate any risks that might occur from doing so.

Modifications by others

Whenever modifications or changes are made by others to the BAC equipment without written permission of BAC, the party who has done the modification becomes responsible for all consequences of this change and BAC declines all liability for the product.

Warranty

BAC will guarantee all products to be free from manufactured defects in materials and workmanship for a period of 24 months from the date of shipment. In the event of any such defect, BAC will repair or provide a replacement. For more details, please refer to the Limitation of Warranties applicable to and in effect at the time of the sale/purchase of these products. You can find these terms and conditions on the reverse side of your order acknowledgement form and your invoice.

3 VCL WATER CARE

About Water Care

In all cooling equipment, operating in evaporative mode, the cooling is accomplished by evaporating a small portion of the re-circulating water as it flows through the equipment. When this water evaporates, the impurities originally present in the water remain. Unless a small amount of water is drained from the system, known as blow down, the concentration of dissolved solids will increase rapidly and lead to scale formation or corrosion or both. Also, since water is being lost from the system through evaporation and blow down, this water needs to be replenished.
The total amount of replenishment, known as make-up, is defined as:

Make-up = evaporation loss + blow down

In addition to the impurities present in the make-up water, any airborne impurities or biological matter are carried into the equipment and drawn into the re-circulating water. Over and above the necessity to blow down a small quantity of water, a water treatment programme specifically designed to address scale, corrosion and biological control should be initiated when the system is first installed and maintained on a continuous base thereafter.
Moreover there must be an ongoing programme of monitoring in place to ensure the water treatment system is maintaining the water quality within the control guidelines.
Check and adjustments of blow down depends on the blow down device actual in use.
To prevent excessive build-up of impurities in the circulating water, a small amount of water must be « bled » from the system at a rate to be determined by the water treatment regime. The amount of blow down is determined by the design cycles of concentration for the system. These cycles of concentration depend on the quality of the make-up water and the design guidelines for the quality of the recirculating water given below.
Make-up water to the evaporative unit should have minimum 30 ppm hardness as $CaCO_3$.
Where use of a softener is necessary to achieve this, the supply to the evaporative unit should not be totally softened, but blended with the incoming unsoftened water to achieve the minimum hardness between 30 and 70 ppm as $CaCO_3$.
Maintaining a minimum hardness in the make-up water offsets the corrosive properties of totally softened water and reduces the reliance on corrosion inhibitors to protect the system.
To control corrosion and scale, the water chemistry of the circulated water has to be kept within the water quality guidelines of the specific materials of construction used, as listed in the following table(s).

	BALTIBOND®Hybrid Coating and SST304L
pH	6.5 to 9.2
pH during initial passivation	Below 8.2 (for units with HDG coil only)
Total hardness (as $CaCO_3$)	50 to 750 mg/l
Total alkalinity (as $CaCO_3$)	600 mg/l max.
Total Dissolved Solids	2050 mg/l max.
Conductivity	3300 µS/cm
Chlorides	300 mg/l max.
Sulfates*	350 mg/l max.*
Total suspended solids	25 mg/l max.
Chlorination (as free chlorine / halogen): continuous	1.5 mg/l max.
Chlorination (as free chlorine / halogen): batch dosing for cleaning & disinfection	5-15 mg/l max. for 6 hours max. 25 mg/l max. for 2 hours max. 50 mg/l max. for 1 hour max.

Circulated Water Quality Guidelines for Baltibond® Hybrid Coating

***Note**: Higher concentration of sulfates is allowed, provided the sum of chlorides + sulfates parameters does not exceed 650 mg/l for Baltibond/SST304L.

	Baltiplus Protection
pH	6.5 to 9.0
pH during initial passivation	Below 8.2
Total hardness (as $CaCO_3$)	50 to 600 mg/l
Total alkalinity (as $CaCO_3$)	500 mg/l max.
Total Dissolved Solids	1500 mg/l max.
Conductivity	2400 µS/cm
Chlorides	250 mg/l max.
Sulfates*	250 mg/l max.*
Total Suspended Solids	25 mg/l max.
Chlorination (as free chlorine / halogen): continuous	1 mg/l max.
Chlorination (as free chlorine / halogan): batch dosing for cleaning & disinfection	5-15 mg/l max. for 6 hours max. 25 mg/l max. for 2 hours max. 50 mg/l max. for 1 hour max.

Circulated Water Quality Guidelines for Baltiplus Protection

***Note:** Higher concentration of sulfates is allowed provided the sum of chlorides + sulfates parameters does not exceed 500 mg/l for Baltiplus Protection.

	SST304L SST316L with HDG coil	SST316L (with SST316L coil)
pH	6.5 to 9.2	6.5 to 9.5
pH during initial passivation	Below 8.2 (for units with HDG coil only)	Not applicable
Total hardness (as $CaCO_3$)	50 to 750 mg/l	50 to 750 mg/l
Total alkalinity (as $CaCO_3$)	600 mg/l max.	600 mg/l max.
Total Dissolved Solids	2050 mg/l max.	2500 mg/l max.
Conductivity	3300 µS/cm	4000 µS/cm
Chlorides	300 mg/l max.	750 mg/l max.
Sulfates*	350 mg/l max.*	750 mg/l max.*
Total Suspended Solids	25 mg/l max.	25 mg/l max.
Chlorination (as free chlorine/halogen): continuous	1,5 mg/l max.	2 mg/l max.
Chlorination (as free chlorine/halogen): batch dosing for cleaning & disinfection	5-15 mg/l max. for 6 hours max. 25 mg/l max. for 2 hours max. 50 mg/l max. for 1 hour max.	5-15 mg/l max. for 6 hours max. 25 mg/l max. for 2 hours max. 50 mg/l max. for 1 hour max.

Circulated Water Quality Guidelines for Stainless Steel

***Note:** Higher concentration of sulphates is allowed provided the sum of chlorides + sulphates parameters does not exceed 650 mg/l for SST304L and 1500 mg/l for SST316L.

For Ozone water treatment application, stainless steel 316L execution is required.

Cycles of concentration are the ratio of the dissolved solids concentration in the circulating water compared to the dissolved solids concentration in the make-up water. The blow down rate can be calculated as follows:

Blow down = Evaporation loss / (Cycles of concentration – 1)

The evaporation loss is not only function of the heat load but also depends on climatic conditions, the type of equipment used and the method of capacity control, which is applied. The evaporation loss at summer conditions is approximately 0.431 l/ 1000 kJ heat rejection. This number should be used for blow down valve sizing only and not for the calculation of annual water consumption.

Biological Control

The growth of algae, slimes and other micro-organisms, if uncontrolled, will reduce system efficiency and may contribute to the growth of potentially harmful micro-organisms, such as Legionella, in the recirculating water system.
Accordingly a treatment programme specifically designed to address biological control should be initiated when the system is first filled with water and administered on a regular base thereafter in accordance with any regulations (national, regional) that may exist or in accordance with accepted codes of good practice, such as EUROVENT 9-5/6, VDMA Detailsheet 24649 etc.
Also during shutdown periods it is recommended to continue the water treatment programme. Alternatively, the basin and pump should be drained.
It is strongly recommended to monitor the bacteriological contamination of the recirculating water on a regular base (for example, TAB test with dip slides on a weekly base) and record all results.
Certain products used for water treatment, particular some dispersant and bio-dispersant additives, might change the properties of the water (such as the surface tension), which can cause excessive drift loss (water passing through the eliminators). In such case we recommend to review the water treatment (product type, dosage) with your water treatment expert.
In case of doubt, a short test can be performed, after cleaning & disinfection, using fresh water without addition of the concerned chemical (within the limits of the local legislation).

Chemical Treatment

1. Water treatment chemicals or non-chemical systems need to be compatible with the materials of construction used in the cooling system including the evaporative cooling equipment itself.
2. In case of chemical water treatment, chemicals should be added to the recirculating water by an automatic feed system. This will prevent localised high concentrations of chemicals, which may cause corrosion. Preferably the water treatment chemicals should be fed into the cooling system at the discharge of the recirculation pump. The chemicals should not be fed in concentrated form, nor batch fed directly into the cold water sump of the evaporative cooling equipment.
3. BAC specifically discourages acid dosing as mean of scale control (unless under certain strict circumstances for open circuit cooling towers with very large system volume and remote sump, or constructed from stainless steel).
4. A competent water treatment company should be consulted for the specific water treatment programme to be applied. Next to the supply of dosing and control equipment and chemicals, the programme should include regular monthly monitoring of the circulating and make up water quality.
5. If it is proposed to operate a treatment programme outside the BAC Water Quality Control Guidelines, the BAC factory warranty may be invalidated if the water quality is persistently outside the Control Guidelines, unless specific prior written BAC approval. (Some parameters may be exceeded under certain strict circumstances.)

It is strongly recommended to check the key parameters of the circulating water quality on a monthly base. See table: "Circulated Water Quality Guidelines". All test results need to be recorded.

Passivation

When new systems are first commissioned, special measures should be taken to ensure that galvanized steel surfaces are properly passivated to provide maximum protection from corrosion. **Passivation** is the formation of a protective, passive, oxide layer on galvanized steel surfaces.
To ensure that galvanized steel surfaces are passivated, the pH of circulating water should be kept between 7.0 and 8.2 and calcium hardness between 100 and 300 ppm (as $CaCO_3$) for four to eight weeks after start-up, or until new zinc surfaces turn dull grey in colour. If white deposits form on galvanized steel surfaces after the pH is returned to normal service levels, it may be necessary to repeat the passivation process.

Stainless steel units and units protected by the BALTIBOND® hybrid coating without galvanized coil, do not require passivation.

In case you can't keep the pH below 8.2, a secondary approach is to conduct a chemical passivation using inorganic phosphate or film-forming passivation agents. Consult your water treatment specialist for specific recommendation.

Overflow Connection

A slight loss of water through the overflow on forced draft units is normal when the fans are in operation, since the unit is in overpressure and some saturated air will be blown out to the unit, carrying several droplets of water.

4 VCL
COLD WEATHER OPERATIONS

About cold weather operation

BAC cooling equipment can be operated in sub freezing ambient conditions provided the proper measures are taken. Listed below are general guidelines which should be followed to minimize the possibility of coil freeze-up. As these guidelines may not include all aspects of the anticipated operation scheme, system designer and operator must thoroughly review the system, location of the equipment, controls and accessories to ensure reliable operation at all times.

Protection Against Sump Water Freezing

To prevent sump water from freezing, either sump heaters or a remote sump located in a heated indoor area must be installed. For a seasonal shut down during the cold weather period, it is recommended to drain the sump and pump.
Drainage of the sump and pump will also be needed if dry operation is anticipated, even if sump heaters are installed. These heaters will NOT prevent sump water from freezing during dry operation at sub freezing ambient conditions. Remote sump installations are best suited for a flexible switch from wet to dry operation, as the sump water is protected at all times. For dry operation applications, ensure that make-up water line is shut off and make-up valve completely drained.
Thermostats for electrical sump heaters for this equipment are set to maintain a sump water temperature of 4°C.

CAUTION
Switch off heaters when the sump is drained.

Capacity Control

In addition to protecting the sump water, all exposed water piping, in particular make-up water lines should be heat traced and insulated.
Spray pumps also need to be heat traced and insulated from pump suction to the overflow level, if they can be exposed to sub-freezing ambient conditions.
It is necessary to prevent the recirculating water from approaching freezing conditions when the system is operating under load. The most « critical » situation occurs, if operation at subfreezing conditions coincides with light load conditions. The key to protecting the recirculating water is capacity control by adjustment of air flow to maintain the temperature of the recirculating water minimal above freezing point. As a rule of thumb this minimum temperature is 5°C, but there are applications, where even lower temperatures can be accepted. (Contact your local BAC Balticare representative for advice.)

The desired method to match the cooling capacity to load and weather conditions is to adjust the air flow by the use of modulating controls (variable speed drives).
Alternatively, multi speed fan motors or fan cycling can be applied, but fans operating on a common heat exchange section should always be operated simultaneously.
It is not recommended to cycle the spray pump as a means of controlling the unit capacity.
Whenever two speed motors are used for capacity control, a time delay of at least 15 seconds is required when switching form high to low speed. Sudden switch over might damage the drive system or the motor.

When operating with VFD drives above nominal frequency be aware of the potential risk for motor overload or mechanical damages.

It is recommended to provide sinus filters on the VFD to prevent bearing damage on fan motors.

CAUTION

REFER TO FAN MOTOR NAMEPLATE DATA WHEN PROGRAMMING A VFD

Spray pumps should be switched off when the fan(s) are idle. Operation with pump but without fan(s) does not provide cooling capacity of any significance but could lead to occasional water splash out at the air intake. For this reason this operation mode should be avoided. Spray pump should be switched off with a time delay of **maximum** 30 seconds after switching off the fan(s) and should be activated **maximum** 30 seconds prior to the anticipated start of the fan(s).
The purpose of a Low Level Cut out Switch for pump protection is to protect the pump from running dry in case of make-up failure or extreme water loss. The status of the alarm can be checked prior to pump start-up, but should not be considered during the first minute after start-up, since activation of the pump can cause a water level drop, that might trigger the alarm. Normal make-up will stabilize the water level after a short period of time.
In case the low level alarm signals, that there is no longer enough water in the cold water sump to guarantee a proper operation, the pump should be stopped (after a time delay of 60 seconds) and only manually restarted after it has been verified that the water in the sump is at or near the overflow level.

In case the low level pump alarm is used to stop the pump, appropriate control logic should be incorporated to prevent hunting of the pump motor. Once the spray pump is stopped, the water in suspension will drain back to the tank and raise the water-level above the alarm level, which will reset the alarm immediately. A manual reset of the alarm after solving the root cause of the low level alarm is recommended. Frequent start/stop or hunting will damage the motor.

Checks and Adjustments

COLD WATER BASIN AND BASIN STRAINERS

The cold water basin should be inspected regularly. Any debris which may have accumulated in the basin or on the strainers should be removed.
Quarterly, or more often if necessary, the entire cold water basin should be drained, cleaned and flushed with fresh water to remove the silt and sediment which normally collects in the basin during operation.
When flushing the basin, the strainers should be left in place to prevent the sediment from re-entering the unit system. After the basin has been flushed, the strainers should be removed, cleaned, and replaced before refilling the basin with fresh water.

CAUTION
DO NOT USE ACID TO CLEAN THE STRAINERS

Remote Basin

The water level in the basin of equipment designed for remote basin operation is a function of the circulating water flow rate, water outlet connection size, quantity and location, and outlet piping size and configuration. The remote basin unit is supplied without a water make-up assembly and the basin operating level during remote basin operation is not adjustable.

OPERATING LEVEL AND MAKE-UP

Before initial start up the straps, that prevent the float ball from moving during transport, as well as the protective bag around this ball, need to be removed.

Fixation and wrapping of Float ball

Operating height is the water level above sump bottom during operation.

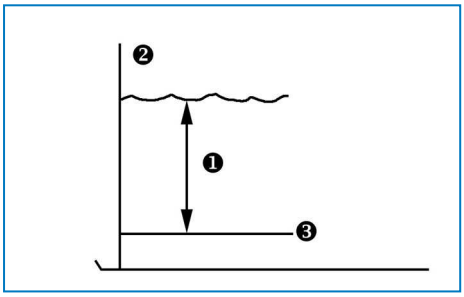

Operating Water level

1. Operating height
2. Overflow
3. Pan Bottom

Operating heights for the evaporative cooling equipment are indicated in the tables below:

Model	Operating Height (measured from pan bottom) (mm)
VCL	140

To check the operating level, proceed as follows:
1. Shut off fan(s) but keep pump(s) running.
2. Remove circular access door next to make-up connection.
3. Measure height from sump bottom to water level and compare with face value from table.
4. Check valve for leakage and replace valve, if necessary.
5. Check that float arm can move freely and that float ball floats and closes valve.
6. Ensure that make-up water supply is adequate.

This procedure does not apply for
- equipment equipped with electrical water level control
- remote sump applications

If a float operated water make-up is used, initial setting and regular adjustments are needed.
The float controlling the make-up valve is mounted on a threaded rod, held in place by wing nuts. (see figure below)

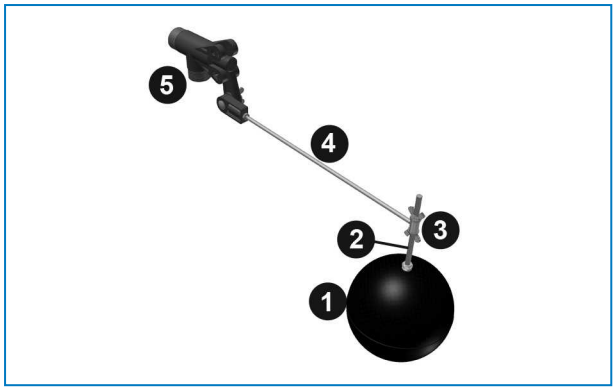

Water Make-up Valve Assembly

1. Float Ball
2. All Threaded Rod
3. Wing Nuts
4. Float Arm Assembly
5. Float Valve

CAUTION

SUPPLY PRESSURE FOR MECHANICAL MAKE-UP VALVES SHOULD BE BETWEEN 1 AND 4,5 BAR.

To make the initial basin water level setting, fill the sump with water until 2 cm above operating level. Adjust the wing nuts of the float ball so, that the make-up valve is completely closed. Before starting the unit for the first time, fill the sump till 1 cm below overflow level (push float ball under). Under normal load conditions this setting should produce the correct operating level. At low load conditions the operating level will rise and needs to be adjusted. The unit basin should be closely monitored and water level adjusted as necessary during the first 24 hours of operation.

BLOW DOWN

In case of a continuous blow down with a metering valve in the bleed line, ensure that the valve is unobstructed and that blow down water can drain freely. Measure the blow down flow rate by recording the time needed to fill a given volume.
For automatic blow down using conductivity control, ensure that the conductivity probe is clean and that the blow down solenoid valve is operational. Unless you have a specific adjustment procedure, your water treatment company should check and adjust set points.

SUMP HEATER PACKAGE

Sump heaters must only operate in the winter to prevent the sump water from freezing, when the water pump(s) and the fan(s) are shut off.
Under no circumstances should sump heaters operate at other times as they could potentially heat the water to temperature levels, which are favourable to bacteriological growth. Ensure every six months the heater thermostat is properly set and clean. Also ensure that control and safety devices, such as low level cut out switches, are operational, clean and properly incorporated into the control circuit.

CAUTION
SUMP HEATERS CAN BE HOT

BELT TENSIONING

Belt tensioning can be adjusted by changing the position of the fan motor(s) by rotating the motor base adjustment screw, which extends through the bottom frame angle.
Check belt tension as follows:

1. Shut off fan(s).
2. Rotate the fan sheave half a turn to evenly distribute the tension in the belt before measuring.
3. Check belt tension by verifying both following conditions.
   - The deflection amounts 10 mm / m free belt length (see figure below).
   - The deflection force required is between the minimum and maximum values given in the table below.

CAUTION
Fan has to be blocked while replacing belts.

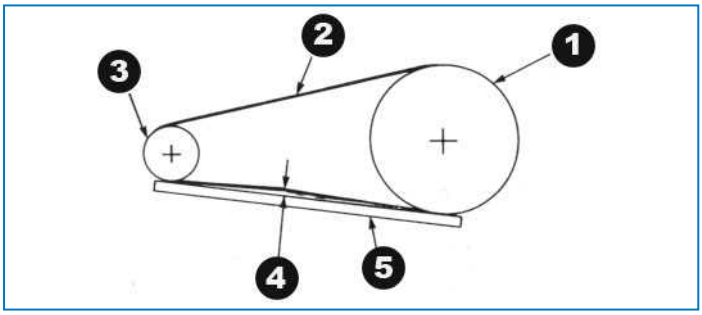

Fan Belt Check and Adjustment

1. Fan Sheave
2. Belt
3. Motor Sheave
4. 10 mm/m Deflection = Proper Belt Tension
5. Straight Edge

CAUTION
overtensioning of belts can lead to component damage.

Belt Profile	Diameter (mm) Motor Sheave	Deflection Force (kg)	
		Min.	Max.
XPA	80 through 125 135 through 200 >200	1.5 2.0 2.5	2.5 3.0 3.5
SPA	100 through 125 132 through 212 >212	1.5 2.0 2.0	2.0 2.5 3.0

Belt Tension Forces

New belts have to be re-tensioned after 24 hours operation.
If belt tensioning is required, please proceed as follows:

1. Loosen the lock nuts on the Motor Base Adjusting Screws.
2. Turn the Motor Base Adjusting Screws clockwise to tension the belt, or counter-clockwise to relieve belt tension. During adjustment of belt tension the drives should be rotated several times by hand to evenly distribute the tension throughout the belt.
3. When the belt is properly tensioned, re-tighten the locking nuts on the Motor Base Adjusting Screws.

There should be no "chirp" or "squeal" when the fan motor is started.

DRIVE ALIGNMENT

Proper drive alignment ensures maximum belt life. Alignment is checked for standard drives **after correct belt tensioning** by placing a straight-edge across both sheaves as shown in the Figure below.
When the drives are properly aligned the gap measured between straight-edge and sheave does not exceed 0,5 mm per 100 mm of fan sheave diameter.

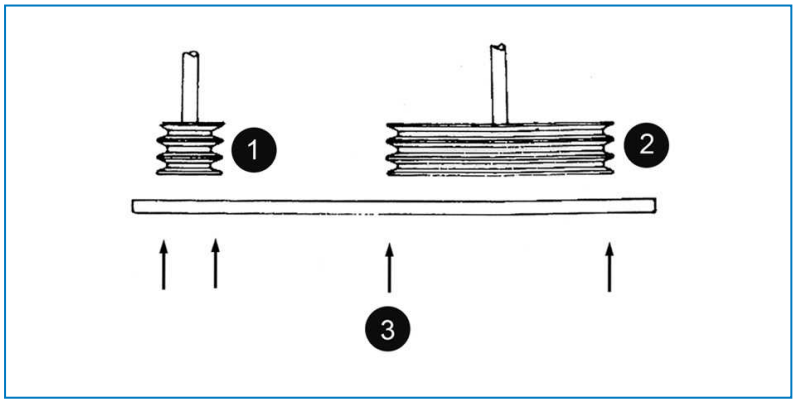

Checking sheave alignment

1. Motor Sheave
2. Fan Sheave
3. Points of Contact

LOCKING COLLAR

The excentric locking collar of the bearing at the drive end ensures that the inner bearing race is secured to the fan shaft. Locking collars can be set using the following procedure. (See Figure below)

1. Stop fan(s) and remove side access panel(s).

2. Loosen the set screw.
3. Using a drift pin centre-punch, tap the collar (in the hole provided) tangentially in the direction of rotation while holding the shaft.
4. Re-tighten the screw.
5. Close unit access door and start pump(s) and fan(s).

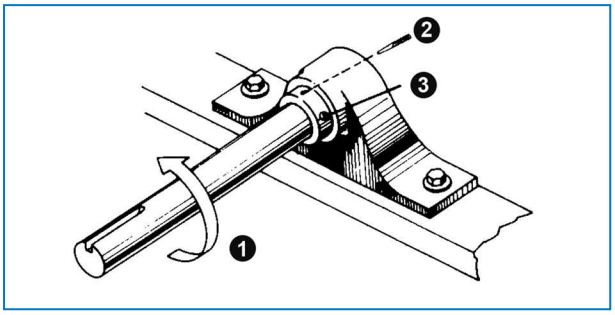

Locking Collar Assembly

1. Direction of Rotation
2. Drift Pin: Tap the locking collar in direction of fan rotation until cam is locked.
3. Tighten set screw.

ROTATION OF FAN(S) AND PUMP(S)

Fans must rotate without obstruction and both fans and pumps must rotate in the correct direction, which is indicated by arrows on the equipment. Check proper functioning as follows:

1. Stop fan(s) and pump(s).
2. Turn the fan by hand to ensure rotation without obstruction. Remove obstruction, if present.
3. Start the pump(s) and check for the proper rotation as indicated by the arrow on the pump cover. If rotation is wrong, stop pump and correct electrical wiring.
4. Start the fan(s) and check for proper rotation as indicated by the arrow on the fan housing. If rotation is wrong stop fan(s) and contact BAC.

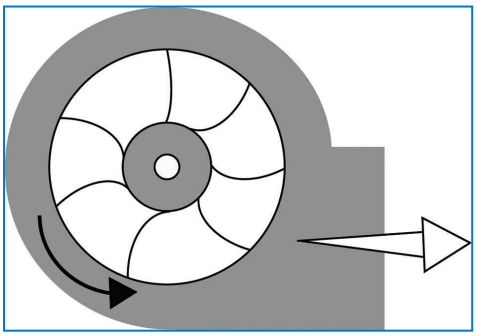

Forward curved centrifugal fan

MOTOR VOLTAGE AND CURRENT

Check the voltage and the current of all three legs of the fan and pump motors. The current should not exceed the nameplate rating. After prolonged shut-down (or motor is stored with unit in kit form) the motor insulation should be checked with a Megger insulation tester prior to restarting.

1. Insulation resistance test – minimum value should be 1 Mega Ohm (1.000.000 Ohms).
2. Thermistors, if fitted, should be checked for continuity with a multi-meter but never Megger-tested.
3. Ensure supply voltage and frequency correspond to the motor nameplate rating.
4. Ensure shaft turns freely.
5. Wire the motor in accordance with the wiring diagram as shown on the motor nameplate and/or in the motor terminal box.
6. Turn on unit and check amp draw does not exceed nameplate rating.

If motor is stored, it should be in a clean, dry place & have the shaft rotated occasionally. Storage areas should not be subject to vibration.

CAUTION

RAPID ON-OFF CYCLING CAN CAUSE THE FAN MOTOR TO OVERHEAT.

It is recommended that controls be set to allow a maximum of 6 on/off cycles per hour.

UNUSUAL NOISE AND VIBRATIONS

Unusual noise and/or vibration are the result of malfunctioning of mechanical components or operational problems (e.g. unwanted ice formation). If this occurs, a thorough inspection of the entire unit followed by immediate corrective action is needed. If required, consult your local BAC Balticare representative for assistance.

Inspections and Corrective Actions

GENERAL CONDITION OF THE EQUIPMENT

The inspection should focus on following areas:

- damage of corrosion protection
- signs of scale formation or corrosion
- accumulation of dirt and debris
- presence of biofilms

Smaller damages of the corrosion protection MUST be repaired as soon as possible to prevent the damage from getting bigger. For BALTIBOND® hybrid coating use kit (part number RK1057). Larger damages should be reported to the local BAC Balticare representative.

If there is evidence of scale formation (more than 0,1 mm) or corrosion, water treatment regime must be checked and adjusted by the supplier.

Any dirt and debris need to be removed following the "Cleaning Procedures" on page 26 .

If there is evidence of biofilms the system, including piping should be drained, flushed and cleaned of slimes and other organic contamination. Refill system with water and apply biocide shock treatment. Check pH value and functionality of ongoing biocide treatment.

HEAT TRANSFER SECTION

The inspection procedure is as follows:

1. Shut off fan(s) and pump(s).

2. Remove the eliminators and access doors.
3. Inspect the coil for
   - obstructions
   - damages
   - corrosion
   - fouling
4. After inspection, install eliminators and access doors and start pump(s) and fan(s).

Remove any obstructions from heat transfer section(s).
Any damages or corroded areas need to be repaired. Call your local BAC Balticare representative for assistance.
Minor fouling can usually be removed chemically or by temporary changes to the water treatment programme. Contact your water treatment supplier for advice. Major fouling requires cleaning and flushing according to the "Cleaning Procedures" on page 26 .
Regular checking of the total aerobic bacteria count (TAB) and maintaining it within acceptable levels are the key to prevent fouling.

DRIFT ELIMINATORS

The inspection procedure is as follows:
1. With fan(s) and pump(s) running visually check for areas with excessive drift loss.
2. Shut off fan(s) and pump(s) and visually check eliminators for
   - obstructions
   - damages
   - cleanliness
   - proper fit
3. If any of the above problems have been observed, stop fan(s) and pump(s) and remove eliminators.
4. Clean eliminators from debris and foreign matter. Remove dirt and obstructions. Replace damaged or ineffective eliminators.
5. Install eliminators and ensure they fit tightly with no gaps.

CAUTION
DO NOT STEP ON ELIMINATORS.

WATER DISTRIBUTION

The inspection procedure is as follows:
1. Shut off the fan(s), but leave the pump(s) running.
2. Check and adjust spray pressure, if required. (not applicable for coil models with standard pumps)
3. Remove the eliminators.
4. Check to see if the nozzles are producing the spray pattern shown in figure(s) below
5. Shut off pump(s) and clean water distribution from dirt and debris. Ensure spray branches and nozzles are in place and clean. Replace damaged or missing nozzles.
6. Install eliminators and ensure they fit tightly with no gaps.
7. Start fan(s) and pump(s).

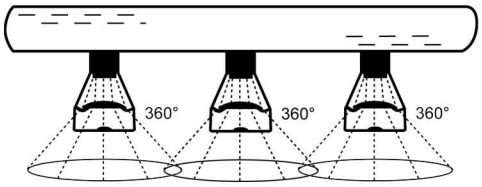

Nozzle Spray Distribution Type

FAN SHAFT

The exposed areas of the fan shaft are coated with a soft seal for added corrosion protection. It is recommended that the coating be inspected for continuity quarterly or at least every 6 months. Any signs of surface corrosion must be treated. This involves:

1. Removal of the protective coating with a suitable cleaning medium.
2. The removal of any surface corrosion with emery cloth.
3. The re-coating of the shaft with soft seal.

FAN MOTOR

During operation it is required to clean the outside surface of the motor at least every 6 months (or more often depending on site conditions) to ensure proper motor cooling. Do not wash down the motor unless it is IP 66 rated. On a quarterly or six monthly basis check:

- Electric connections
- Motor protection devices
- Check amp draw
- Motor bearings for noise/overheating
- Motor holding bolts
- External surface of motor for corrosion

SPRAY WATER PUMP

The BAC pump contains a mechanical seal between pump housing and pump motor. This seal needs to be checked quarterly for proper operation and replaced if necessary.

ELECTRIC WATER LEVEL CONTROL PACKAGE (OPTIONAL)

The electric water level control package (optional) maintains a constant water level in the cold water sump independent of cooling load changes and water supply pressure variations. Ensure every six months that all components (valve, float switches) are operational and clean.
During commissioning the tower should be filled manually till overflow level (push float ball under) to prevent air suction of the pump during first start-up.

CAUTION

When disassembling the float switch for cleaning, make sure to reassemble it in *exactly* the same position, otherwise it will not function correctly.

Lubrication

FAN SHAFT BEARINGS

The fan shaft is supported by ball bearings (see Figure below).
Under normal operating conditions the bearings should be greased every 2000 operating hours or at least every six months. The bearings should be lubricated with one of the following water resistant inhibited greases (or an equivalent), which are good for ambient temperature ranging from -20°C to 120°C or an equivalent.

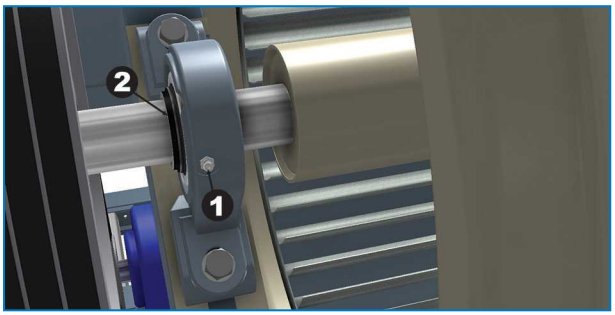

Ball Bearing

1. Lube Fitting
2. Locking Collar

The bearings should be lubricated only with a hand grease gun. Do not use high-pressure grease guns, since they may rupture the bearing seals. When lubricating, purge the old grease from the bearing by gradually adding grease until a bead of new grease appears at the seal. In particular when extended lubrication lines are fitted ensure that ALL old grease is removed and that new grease is leaving the seal.

For grease products see Table below.

MOTOR BEARINGS

Motors with frame size >200L (>30kW) have grease fittings

- grease intervals: twice a year unless otherwise shown on the nameplate of the motor
- grease products: see below

The bearings should be lubricated only with a hand grease gun. Do not use high pressure grease guns, since they may rupture the bearing seals. When lubricating, purge the old grease from the bearing by gradually adding grease until a bead of new grease appears at the seal.

GREASE PRODUCTS

Shell	Alvania grease RL3	-20°C to +120°C
Texaco	Multifak Premium 3	-30°C to +140°C
Klüber	Isoflex LDS Special A	-50°C to +120°C
Mobil	Mobilith SHC 100	-40°C to +175°C
Total Fina Elf	Multis 3	-20°C to +120°C

Grease Products

ADJUSTABLE MOTOR BASE

The motor base adjusting screw (see figure below) should be coated every six months using a good quality corrosion inhibiting grease, such as one of those recommended for lubricating the fan shaft bearings.

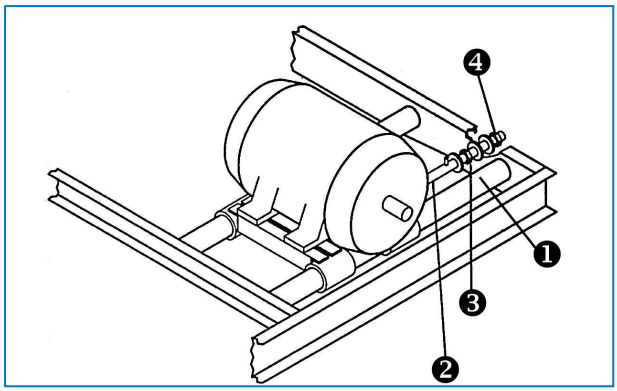

Adjustable Motor Base

1. Motor Base Slide
2. Adjustment Rod
3. Lock Nut
4. Adjusting Nut

Cleaning Procedures

MECHANICAL CLEANING

Keeping your evaporative cooling equipment (and the associated system) clean will maintain its efficiency and help to prevent uncontrolled bacteriological growth. The recommended cleaning procedures are described below:

1. Disconnect fan and pump motor(s) and shut off make-up supply.
2. Remove screens, eliminators, access panels and doors and drain system. Do not remove sump strainer.
3. Clean debris from exterior and fan(s) with soft brush, if necessary use water and soap.
4. Clean interior with (soap) water and soft brush, if necessary use high pressure water jet.
5. Remove any debris from water distribution system and clean any nozzles if clogged. If necessary nozzle and grommet may be removed for cleaning.
6. Remove debris from heat transfer section (coil).
7. Flush with clean water and drain to remove accumulated dirt.
8. Remove, clean and replace sump strainer(s).
9. Clean debris from screens and eliminators with water jet and install.
10. Remove debris from access doors and panels with soft brush and (soap) water and install.
11. Close drain and open make-up supply. Fill system up to overflow level with clean water.

DISINFECTION

Disinfection of your cooling system may be needed in case of high concentration of aerobic bacteria and/or Legionella. Disinfection is also recommended for evaporative cooling systems with known or suspected high bacteriological levels, prior to a cleaning procedure.
Some local or national guidance also recommends disinfection prior to initial start up, after a prolonged shut down, after routine cleaning operations or when significant alterations have been made to the cooling system.
Disinfection must be carried out in accordance with a proper procedure and take into account the safety of the cleaning and disinfection staff.

Typically disinfection is achieved using a sodium hyper chloride solution to maintain a residual value of 5 - 15 mg/l of free chlorine and circulate this around the system for up to 6 hours. Higher chlorine levels for a shorter period are possible, but require a higher level of corrosion protection than galvanized steel only. Consult your BAC Balticare representative for further information.
Excessive levels of chlorine must be avoided as this quickly can lead to corrosion and damage to your system. Chlorinated water should be de-chlorinated before draining and after disinfection the system must be thoroughly flushed through with clean water.

A proper regularly monitored biocide programme reduces the need for cleaning and disinfection actions significantly.

6 VCL COMPREHENSIVE MAINTENANCE

About Comprehensive Maintenance

In order to ensure maximum efficiency and minimum downtime of your evaporative cooling system, it is recommended to establish and execute a programme of preventive maintenance. Your local BAC Balticare representative will assist you in establishing and implementing such programme. The preventive maintenance programme must not only avoid that excessive downtime occurs under unforeseen and unwanted conditions, it also ensures that factory authorized replacement parts are used, which are designed to fit and for their purpose carry the full factory warranty. To order factory authorized parts, contact your local BAC Balticare representative. Make sure you include the unit serial number when ordering any parts.
To facilitate servicing of the equipment, it is suggested that the following parts be carried on hand:

- Make-up float ball (if applicable)
- Water make-up valve
- Fan shaft bearings
- Spray nozzles and grommets
- Spray distribution branch grommets
- Set of belts
- BALTIPLUS/BALTIBOND® repair (touch-up) kits

Insist on factory authorised parts to avoid loss of efficiency or an operational risk, which may occur when non authorised parts are used.

Prolonged Outdoor Stay

Should the unit(s) be stored outside prior to installation and/or start-up for approximately one month or longer, or stored in severe climates, it is imperative that certain actions be performed by the installing contractor in order to maintain the unit in "as shipped" condition. These actions include but are not limited to:

- Rotate the fan(s) once per month, at least 10 revolutions.
- Rotate the motor shaft of all motors installed on the unit(s) once per month, at least 10 revolutions. This includes the pump motor.
- Add desiccants to control panel interiors.
- Wrap motor in non-plastic protective material.
- Keep drains open on the cold water basins.
- Ensure unit(s) is stored on level ground surface.
- Remove and store fan belts and access door gaskets.
- Hot dip galvanized and stainless steel coils of BAC condensers are filled with a low pressure inert gas at the factory before shipping, to ensure an optimal internal corrosion protection. It is recommended to check the overpressure every six months (connect a manometer to the valve).
- Purge old bearing grease by new grease at start of storage period and repeat before start-up.
- Protect all black steel components with RUST VETO or equivalent corrosion protective material.

For complete instructions, please contact your local BAC-Balticare Representative.

7 VCL FURTHER ASSISTANCE & INFORMATION

Balticare

BAC has established a specialized independent total care company called Balticare. The BAC Balticare offering involves all elements required to ensure a safe and efficient operation of your evaporative cooling products. From a full range of risk assessment to selective water treatment, training, testing, record keeping and annual system overview.
For more details, contact BAC Balticare at www.balticare.com or you can also contact your local BAC representative for further information and specific assistance at www.BaltimoreAircoil.eu.

More Information

REFERENCE LITERATURE

- Eurovent 9-5 (6) Recommended Code of Practice to keep your Cooling System efficient and safe. Eurovent/Cecomaf, 2002, 30p.
- Guide des Bonnes Pratiques, Legionella et Tours Aéroréfrigérantes. Ministères de l'Emploi et de la Solidarité, Ministère de l'Economie des Finances et de l'Industrie, Ministère de l'Environnement, Juin 2001, 54p.
- Voorkom Legionellose. Minsterie van de Vlaamse Gemeenschap. December 2002, 77p.
- Legionnaires' Disease. The Control of Legionella Bacteria in Water Systems. Health & Safety Commission. 2000, 62p.
- Hygienische Anforderungen an raumlufttechnische Anlagen. VDI 6022.

INTERESTING WEB SITES

- www.BaltimoreAircoil.eu
- www.Balticare.com
- www.eurovent-certification.com
- www.ewgli.org
- www.ashrae.org
- www.uniclima.org
- www.aicvf.org
- www.hse.gov.uk

COOLING TOWERS

CLOSED CIRCUIT COOLING TOWERS

ICE THERMAL STORAGE

EVAPORATIVE CONDENSERS

HYBRID PRODUCTS

PARTS & SERVICES

BLUE by nature
GREEN at heart

www.BaltimoreAircoil.eu

info@BaltimoreAircoil.eu

www.balticare.com

info@balticare.com

Please refer to our website for local contact details.

Industriepark - Zone A, B-2220 Heist-op-den-Berg, Belgium

© Baltimore Aircoil International nv